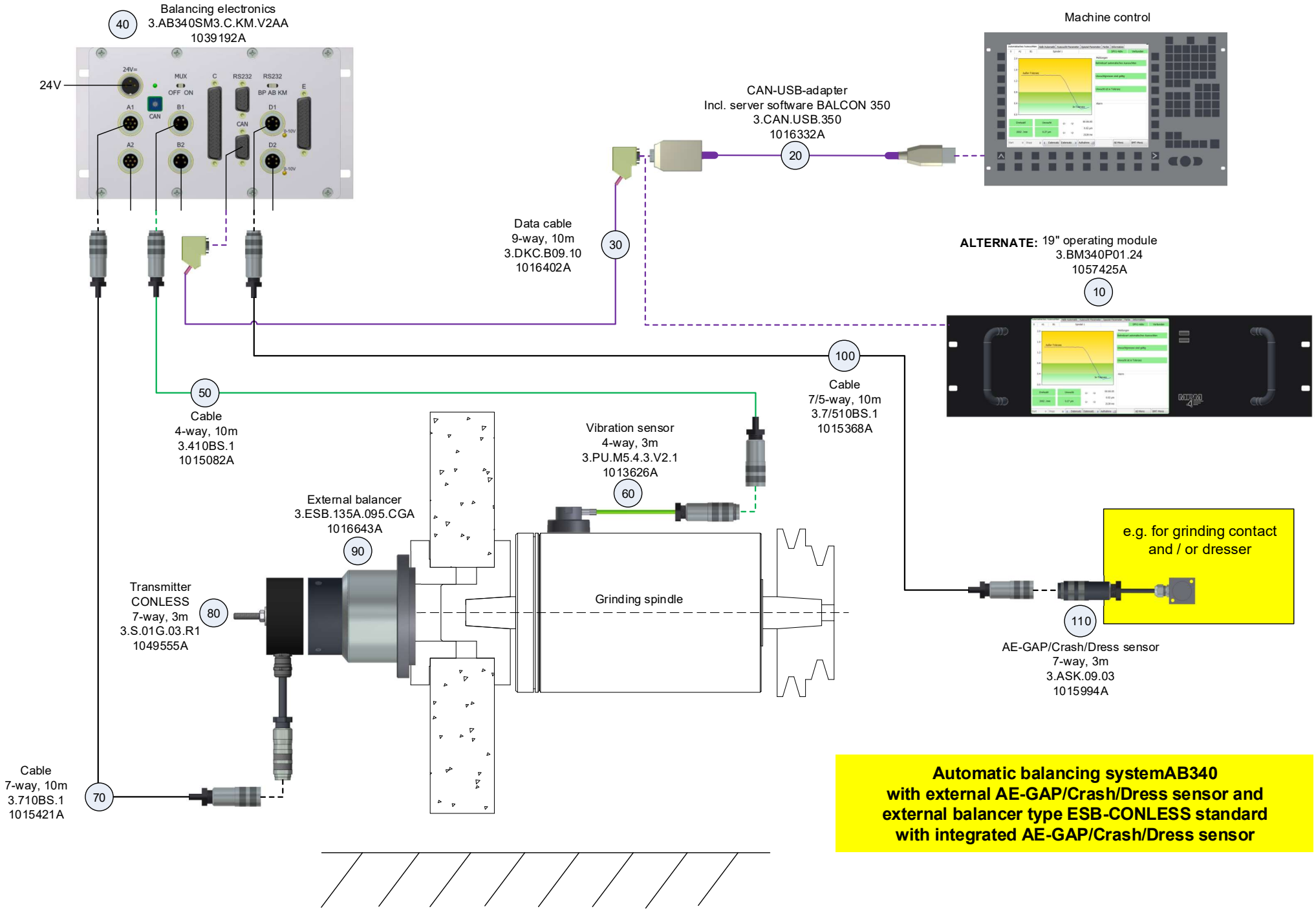
Balancing electronics
3.AB340SM3.C.KM.V2AA
1039192A
40
24V
Machine control
CAN-USB-adapter
Incl. server software BALCON 350
3.CAN.USB.350
1016332A
20
Data cable
9-way, 10m
3.DKC.B09.10
1016402A
30
ALTERNATE: 19" operating module
3.BM340P01.24
1057425A
10
100
Cable
7/5-way, 10m
3.7/510BS.1
1015368A
50
Cable
4-way, 10m
3.410BS.1
1015082A
Vibration sensor
4-way, 3m
3.PU.M5.4.3.V2.1
1013626A
60
External balancer
3.ESB.135A.095.CGA
1016643A
90
Transmitter
CONLESS
7-way, 3m
3.S.01G.03.R1
1049555A
80
Grinding spindle
e.g. for grinding contact
and / or dresser
110
AE-GAP/Crash/Dress sensor
7-way, 3m
3.ASK.09.03
1015994A
Cable
7-way, 10m
3.710BS.1
1015421A
70
Automatic balancing systemAB340
with external AE-GAP/Crash/Dress sensor and
external balancer type ESB-CONLESS standard
with integrated AE-GAP/Crash/Dress sensor